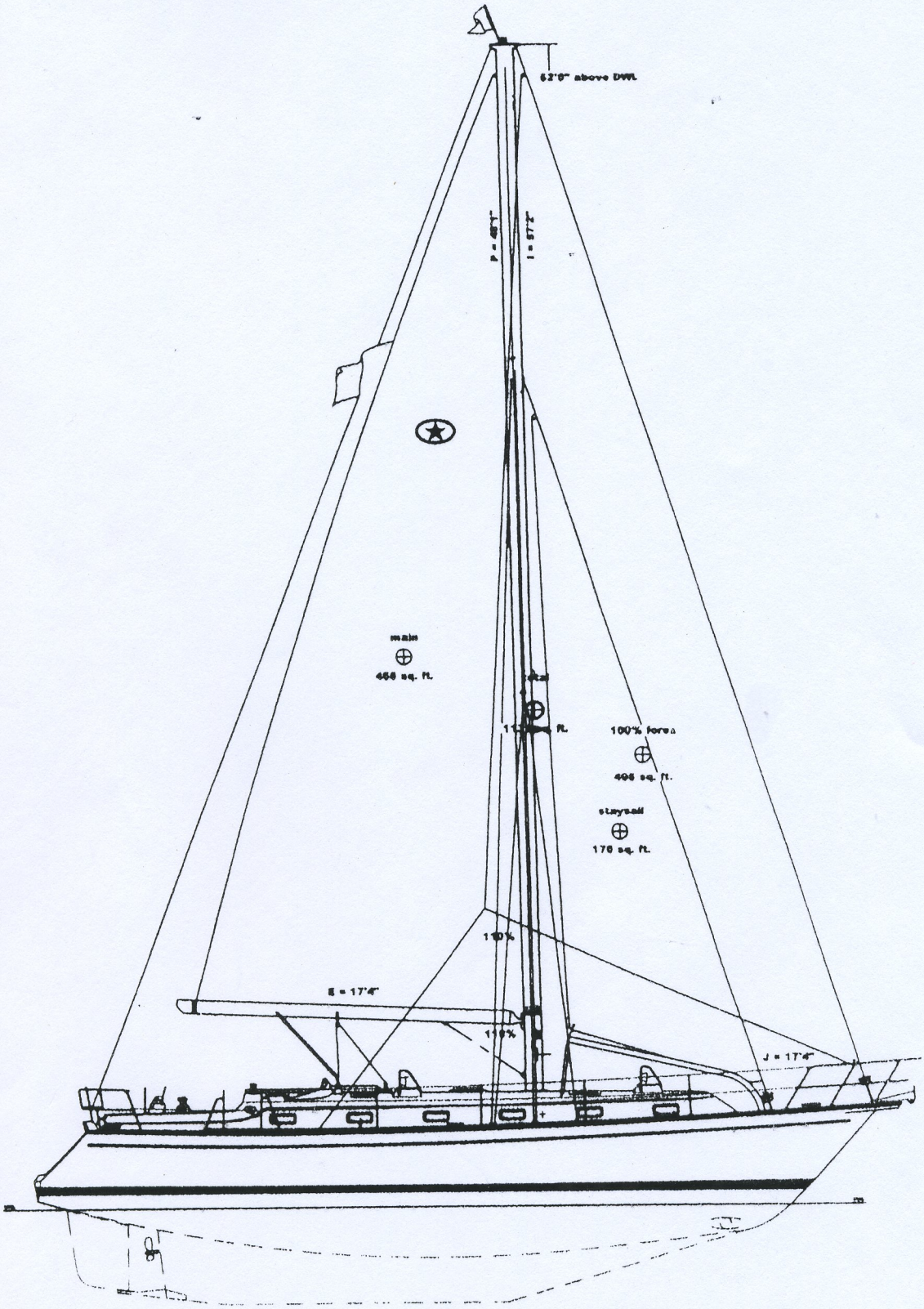

SAILPLAN
ISLAND PACKET 440

FIGURE 2

ARRANGEMENT
ISLAND PACKET 440

FIGURE 3

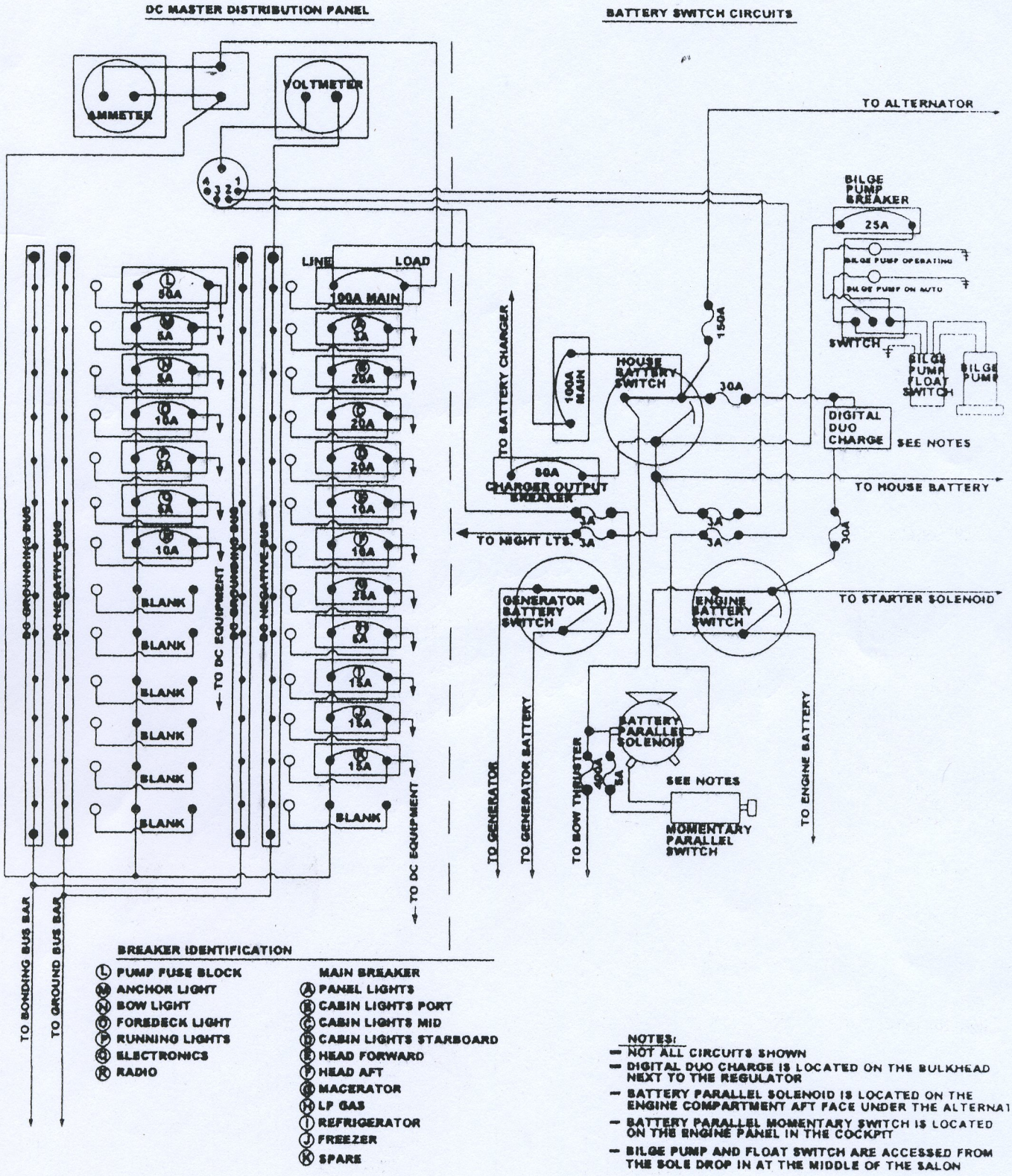
DC MASTER DISTRIBUTION PANEL
BATTERY SWITCH CIRCUITS
AMMETER
VOLTMETER
TO ALTERNATOR
BILGE PUMP BREAKER
25A
BILGE PUMP OPERATING
BILGE PUMP ON AUTO
SWITCH
BILGE PUMP FLOAT SWITCH
BILGE PUMP
LINE
LOAD
100A MAIN
50A
5A
5A
10A
5A
5A
10A
BLANK
BLANK
BLANK
BLANK
BLANK
BLANK
5A
20A
20A
20A
10A
10A
25A
5A
15A
15A
15A
BLANK
TO DC EQUIPMENT
TO DC EQUIPMENT
DC GROUNDING BUS
DC NEGATIVE BUS
DC GROUNDING BUS
DC NEGATIVE BUS
TO BATTERY CHARGER
100A MAIN
HOUSE BATTERY SWITCH
150A
30A
DIGITAL DUO CHARGE
SEE NOTES
50A
CHARGER OUTPUT BREAKER
TO HOUSE BATTERY
3A
3A
3A
3A
30A
TO NIGHT LTS.
GENERATOR BATTERY SWITCH
ENGINE BATTERY SWITCH
TO STARTER SOLENOID
BATTERY PARALLEL SOLENOID
400A
5A
SEE NOTES
MOMENTARY PARALLEL SWITCH
TO GENERATOR
TO GENERATOR BATTERY
TO BOW THRUSTER
TO ENGINE BATTERY
TO BONDING BUS BAR
TO GROUND BUS BAR
BREAKER IDENTIFICATION
L PUMP FUSE BLOCK
M ANCHOR LIGHT
N BOW LIGHT
O FOREDECK LIGHT
P RUNNING LIGHTS
Q ELECTRONICS
R RADIO
MAIN BREAKER
A PANEL LIGHTS
B CABIN LIGHTS PORT
C CABIN LIGHTS MID
D CABIN LIGHTS STARBOARD
E HEAD FORWARD
F HEAD AFT
G MACERATOR
H LP GAS
I REFRIGERATOR
J FREEZER
K SPARE
NOTES:
- NOT ALL CIRCUITS SHOWN
- DIGITAL DUO CHARGE IS LOCATED ON THE BULKHEAD NEXT TO THE REGULATOR
- BATTERY PARALLEL SOLENOID IS LOCATED ON THE ENGINE COMPARTMENT AFT FACE UNDER THE ALTERNAT
- BATTERY PARALLEL MOMENTARY SWITCH IS LOCATED ON THE ENGINE PANEL IN THE COCKPIT
- BILGE PUMP AND FLOAT SWITCH ARE ACCESSED FROM THE SOLE DROP IN AT THE MIDDLE OF THE SALON
ISLAND PACKET 440
DC PANEL SCHEMATIC

FIGURE 4

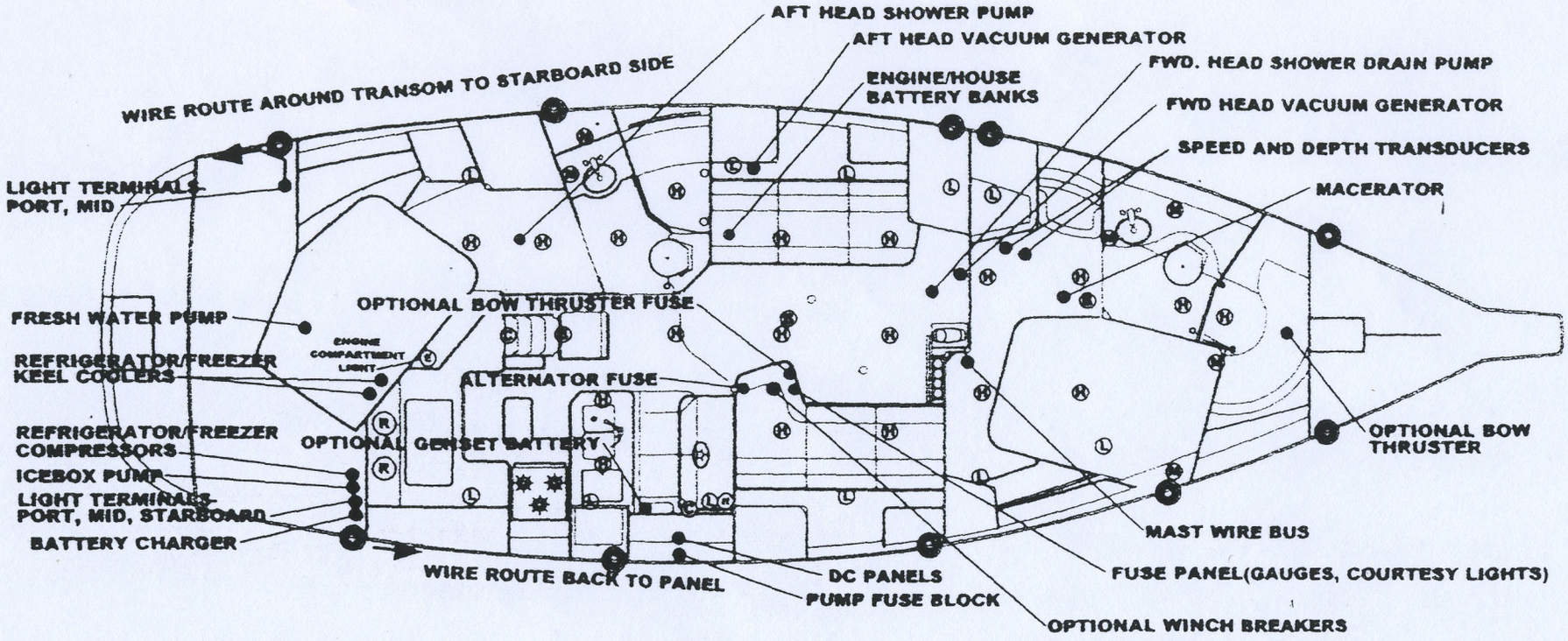

FIGURE 5

(H) HEADLINER LIGHTS-WIRES ARE ROUTED BETWEEN DECK AND HEADLINER AND EXIT AT AFT STARBOARD LAZARETTE

(L) CABINSIDE LIGHTS

(C) COURTESY LIGHT

(B) BILGE LIGHT

(E) ENGINE COMPARTMENT LIGHTS

(R) REFRIGERATOR/FREEZER LIGHTS

(M) OTHER CABIN LIGHTS

(F) FOREPEAK LIGHT

(S) LAZARETTE LIGHTS

(D) DIMMER SWITCH

FAN DROP/SPEAKER DROP

RED WIRE ARE POSITIVE
YELLOW WIRES ARE NEGATIVE

DC WIRING DIAGRAM
ISLAND PACKET 440

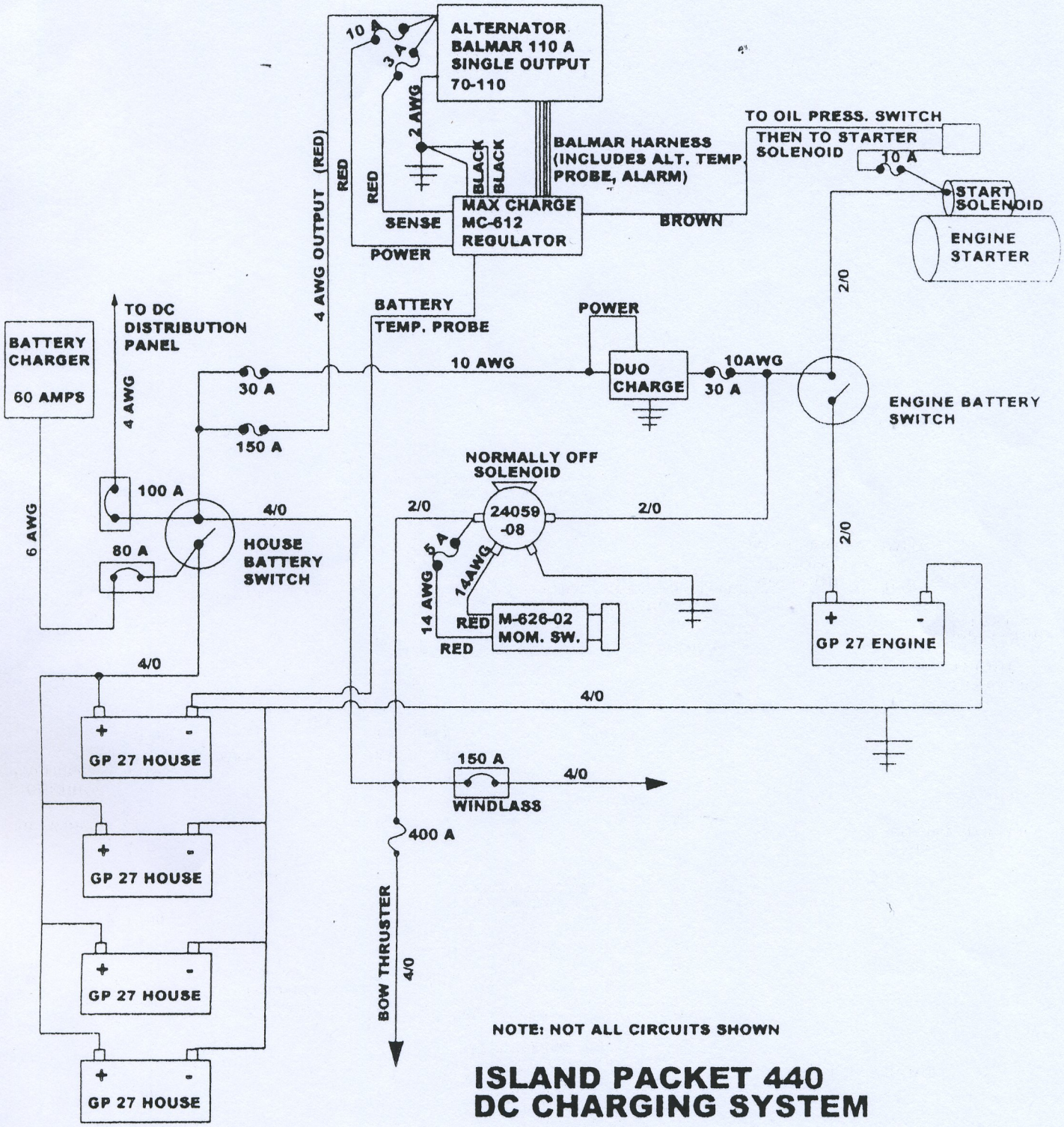

NOTE: NOT ALL CIRCUITS SHOWN

ISLAND PACKET 440
DC CHARGING SYSTEM

HULLS 1 TO 33

FIGURE 6

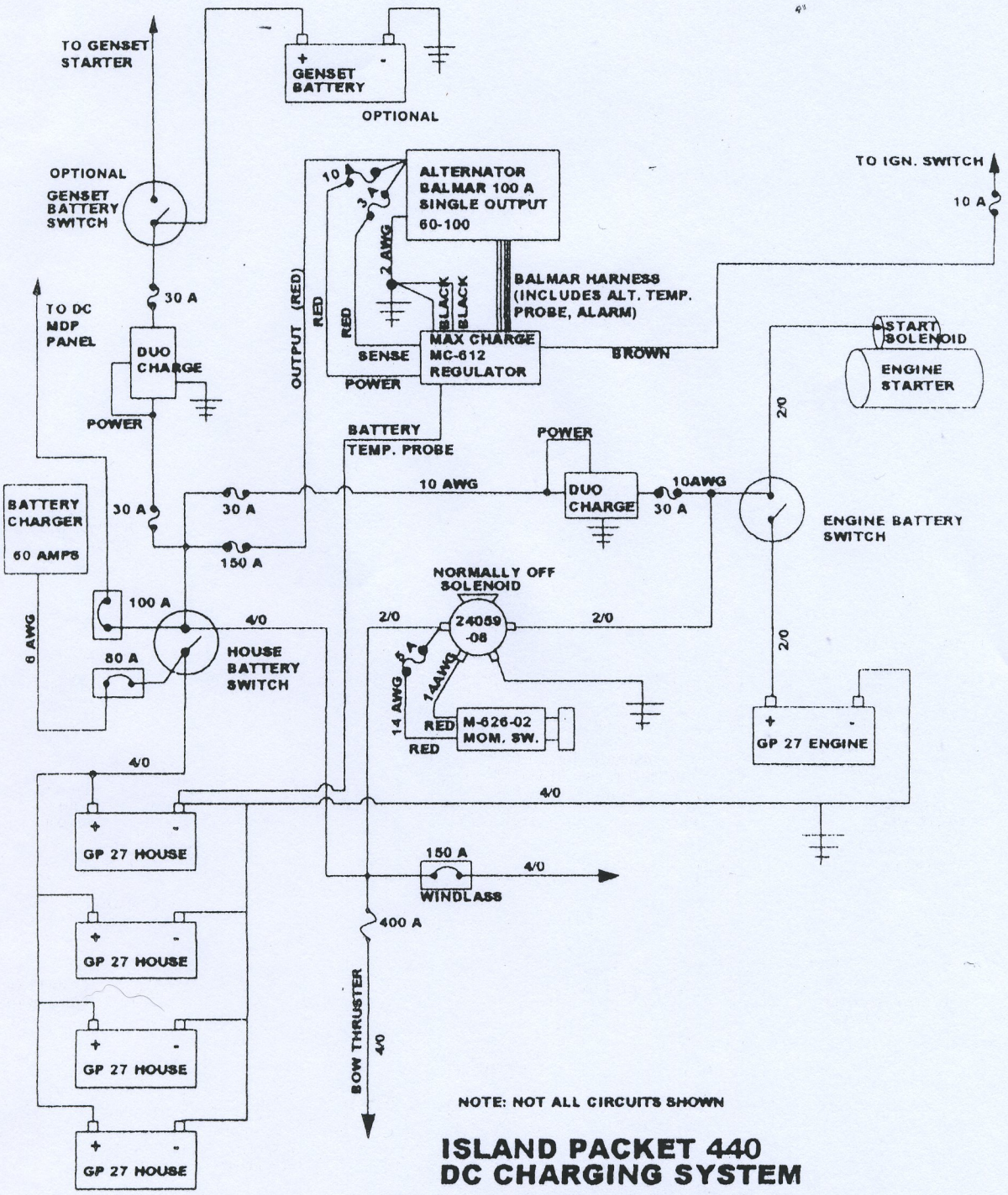

NOTE: NOT ALL CIRCUITS SHOWN

ISLAND PACKET 440 DC CHARGING SYSTEM

REVISION 1/4/07: DELETE OIL PRESSURE SWITCH AND RUN BROWN POWER WIRE DIRECTLY TO PANEL

REVISION 3/5/07: CHARGE GENSET BATTERY THROUGH DUO CHARGE HULLS #34 AND UP

FIGURE 6

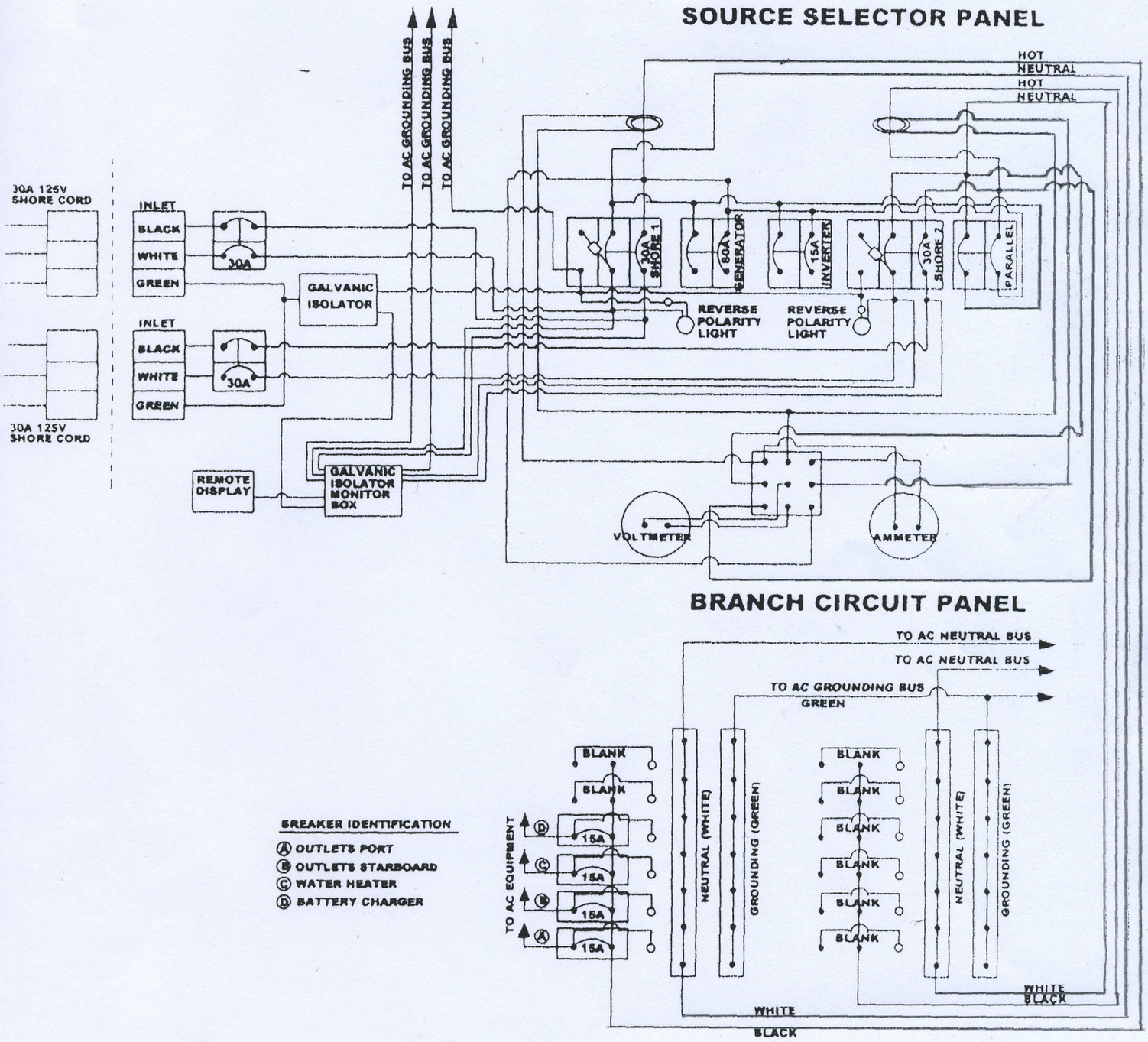

AC PANEL SCHEMATIC ISLAND PACKET 440

THIS DIAGRAM IS FOR 120 VOLT AC SINGLE PHASE, 60 HZ, 30 AMP SHOREPOWER SERVICE

FIGURE 7

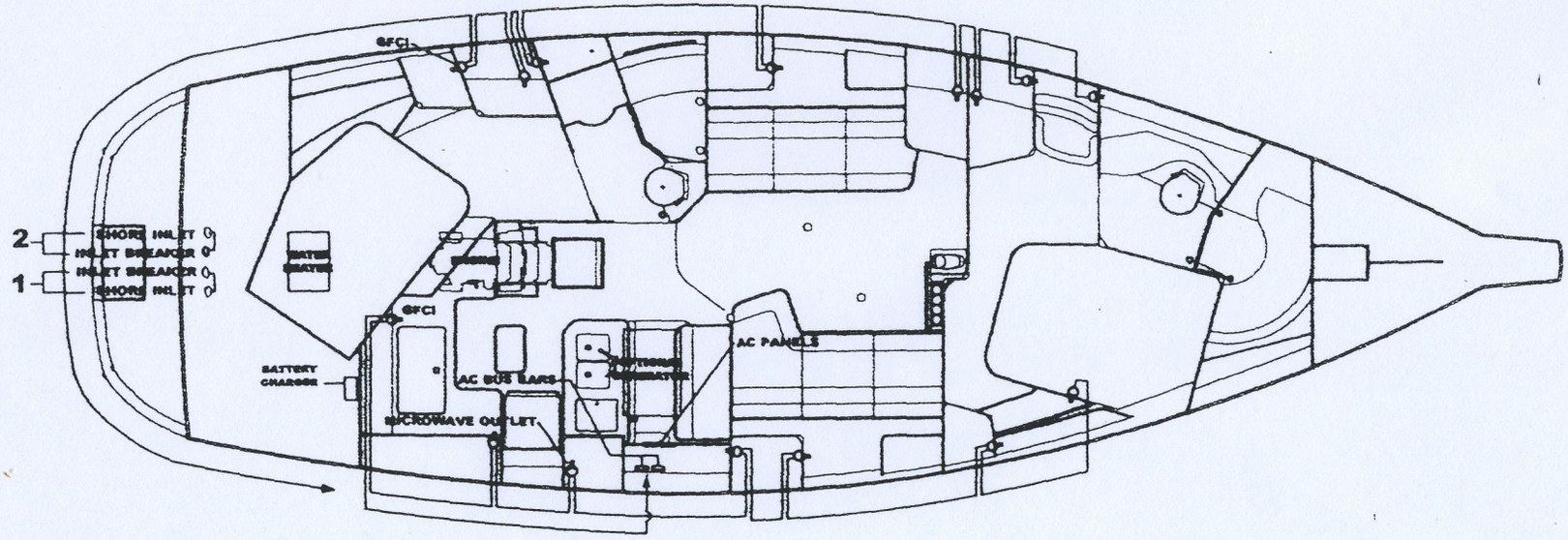

SEE AC PANEL SCHEMATIC
FOR PANEL WIRING

WIRE ROUTES REPRESENT 10 AWG 3 WIRE FROM OUTLETS
UNLESS OTHERWISE NOTED

BLACK = HOT TO PANEL
WHITE = NEUTRAL TO NEUTRAL BUS
GREEN = GROUNDING TO GROUNDING BUS

THIS BOAT IS WIRED FOR 120 VOLT AC, SINGLE PHASE
60 HZ 30 AMP SHOREPOWER SERVICE

AC WIRING DIAGRAM
ISLAND PACKET 440

FIGURE 8

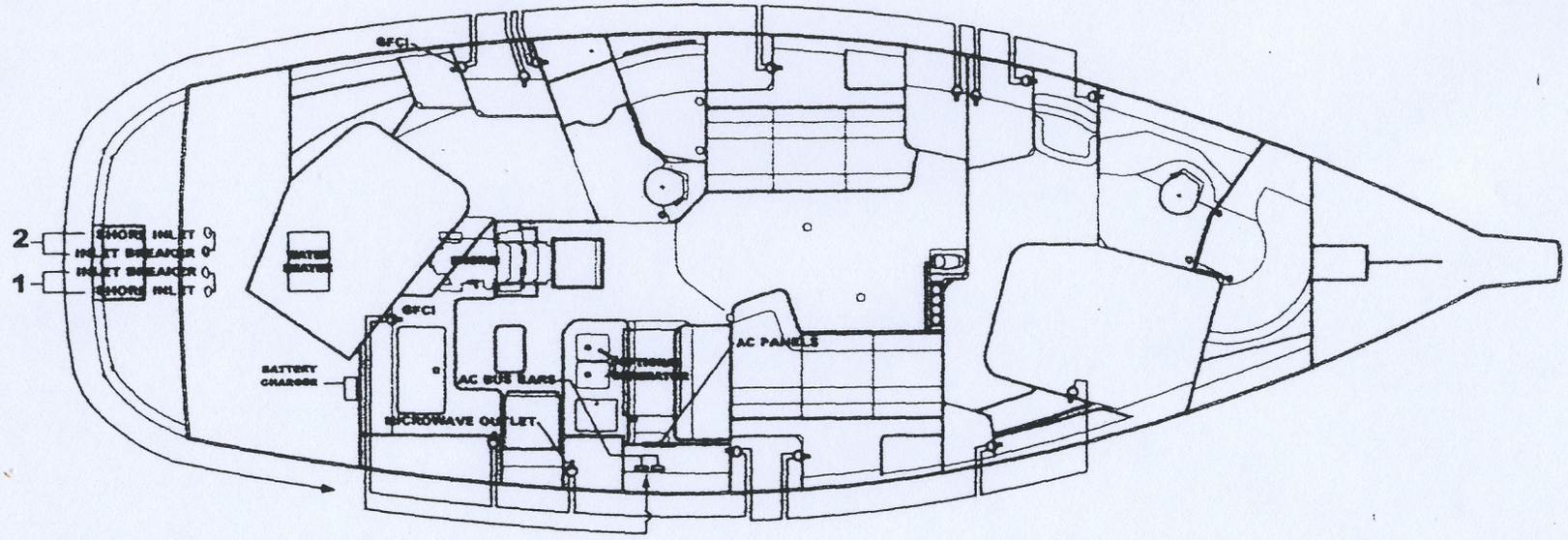

SEE AC PANEL SCHEMATIC
FOR PANEL WIRING

WIRE ROUTES REPRESENT 10 AWG 3 WIRE FROM OUTLETS
UNLESS OTHERWISE NOTED

BLACK = HOT TO PANEL
WHITE = NEUTRAL TO NEUTRAL BUS
GREEN = GROUNDING TO GROUNDING BUS

THIS BOAT IS WIRED FOR 120 VOLT AC, SINGLE PHASE
60 HZ 30 AMP SHOREPOWER SERVICE

AC WIRING DIAGRAM
ISLAND PACKET 440

FIGURE 8

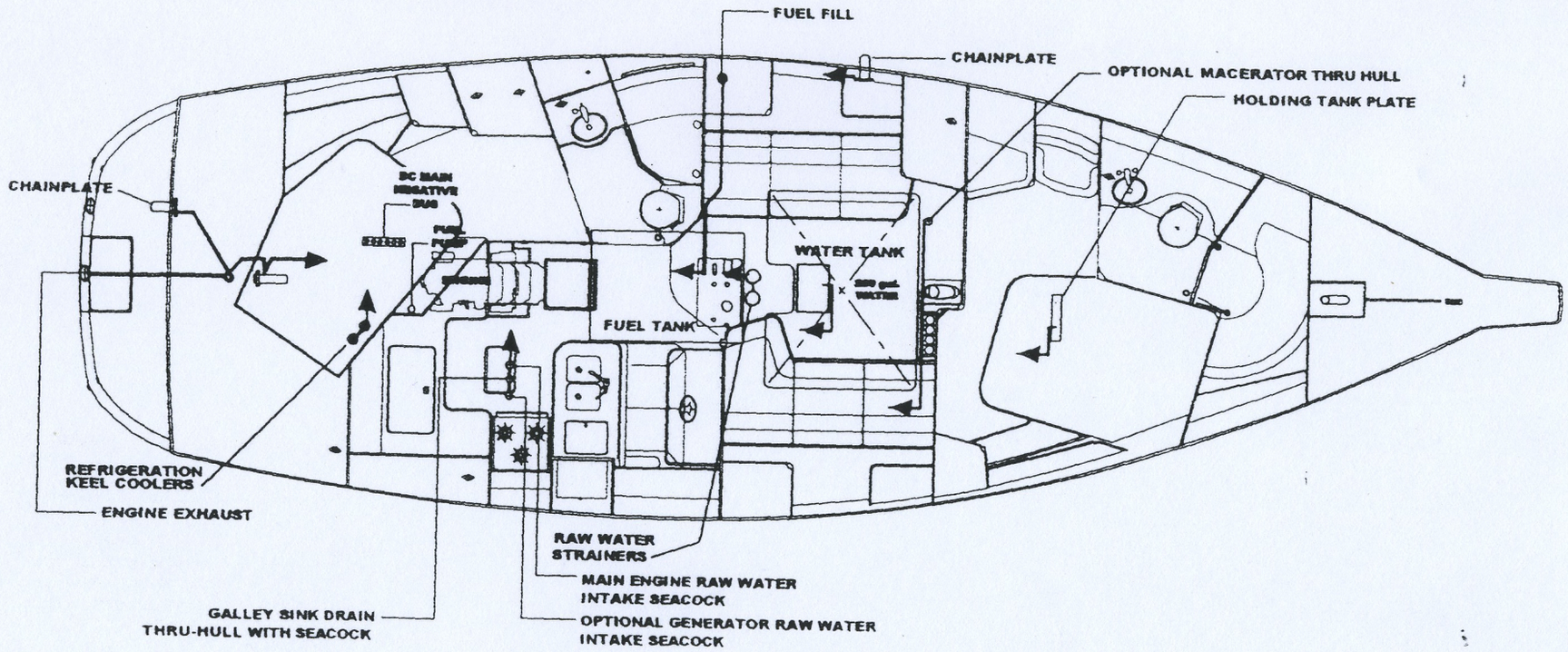

FIGURE 9

ALL BONDING CONDUCTORS CONNECTED TO ENGINE NEGATIVE BUS

BONDING (DC GROUNDING) ISLAND PACKET 440

HULLS #01 THRU 04

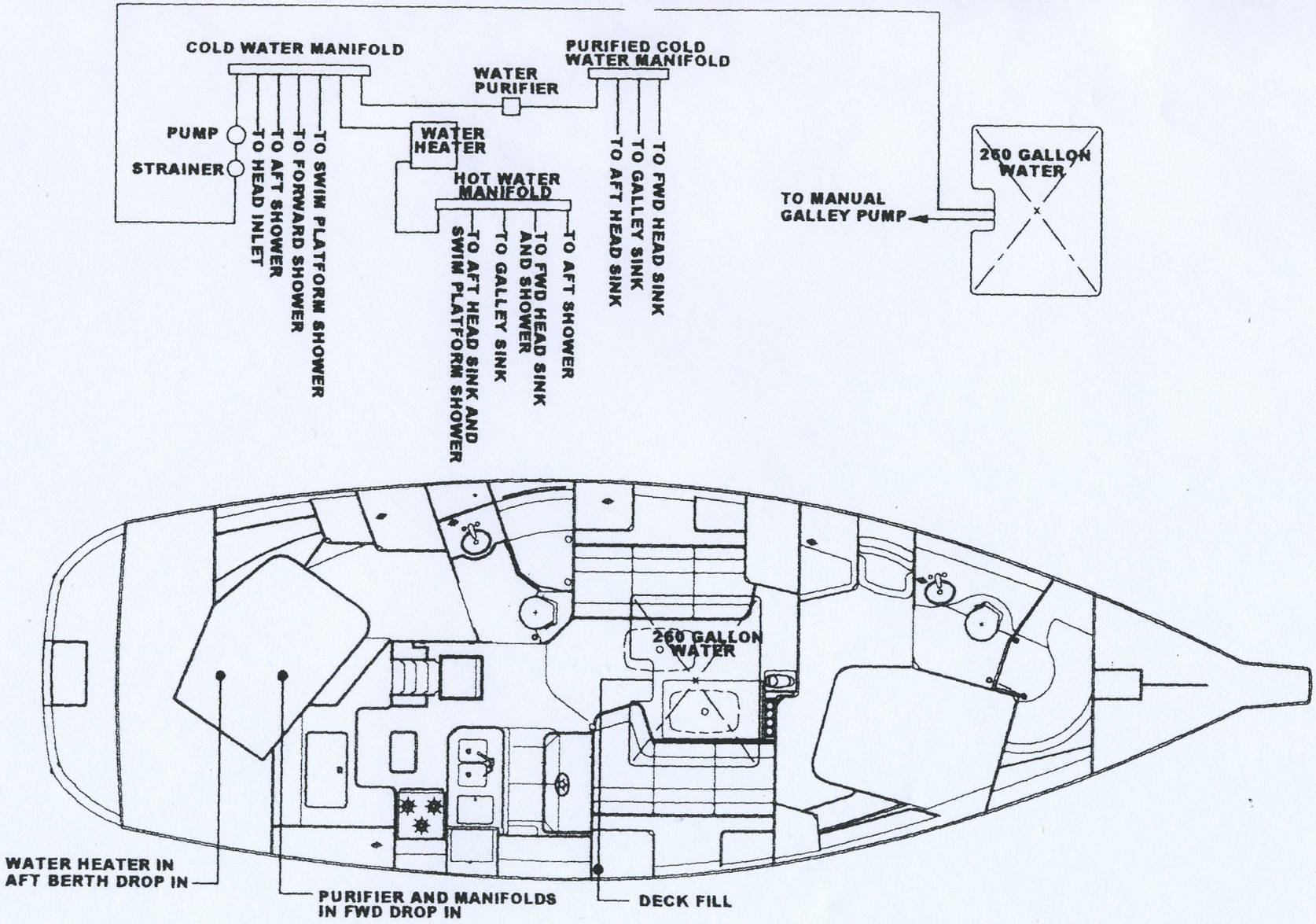

FIGURE 10

FRESH WATER SYSTEM
ISLAND PACKET 440

HULLS 1 TO 32

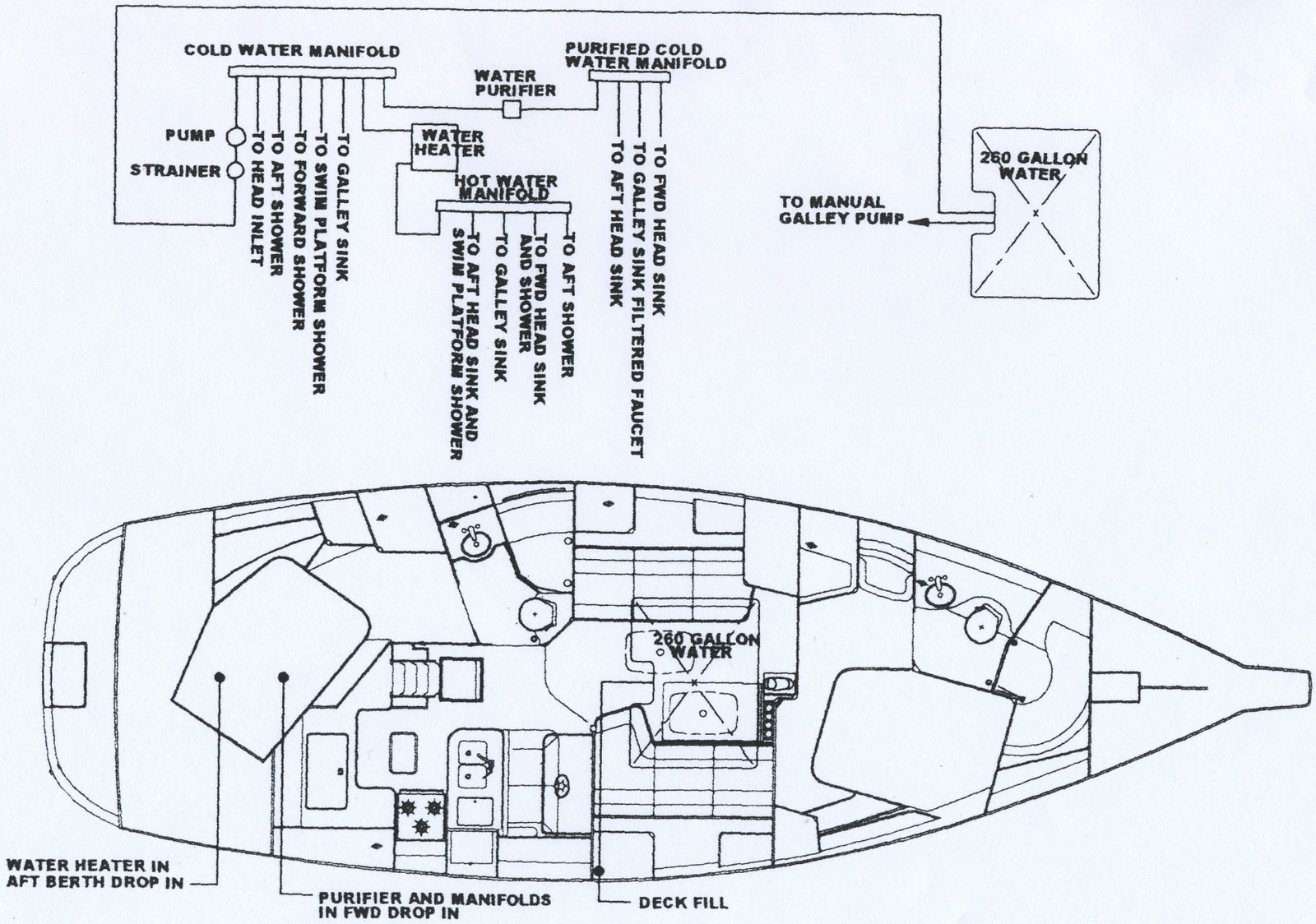

FRESH WATER SYSTEM
ISLAND PACKET 440
HULLS 33 AND UP

FIGURE 10

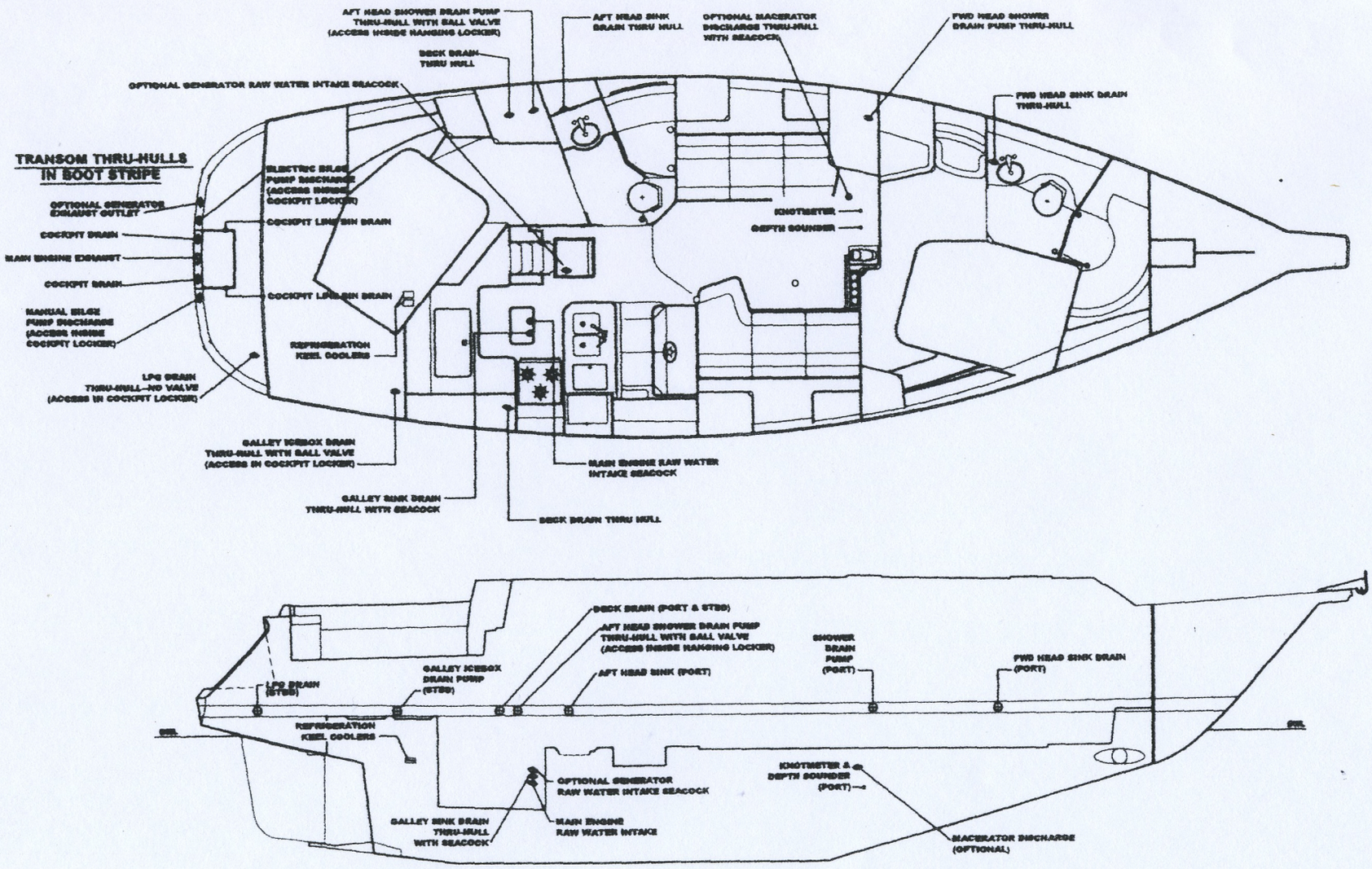

FIGURE 11A

THRU-HULL LOCATIONS
ISLAND PACKET 440

HULLS #05 & UP

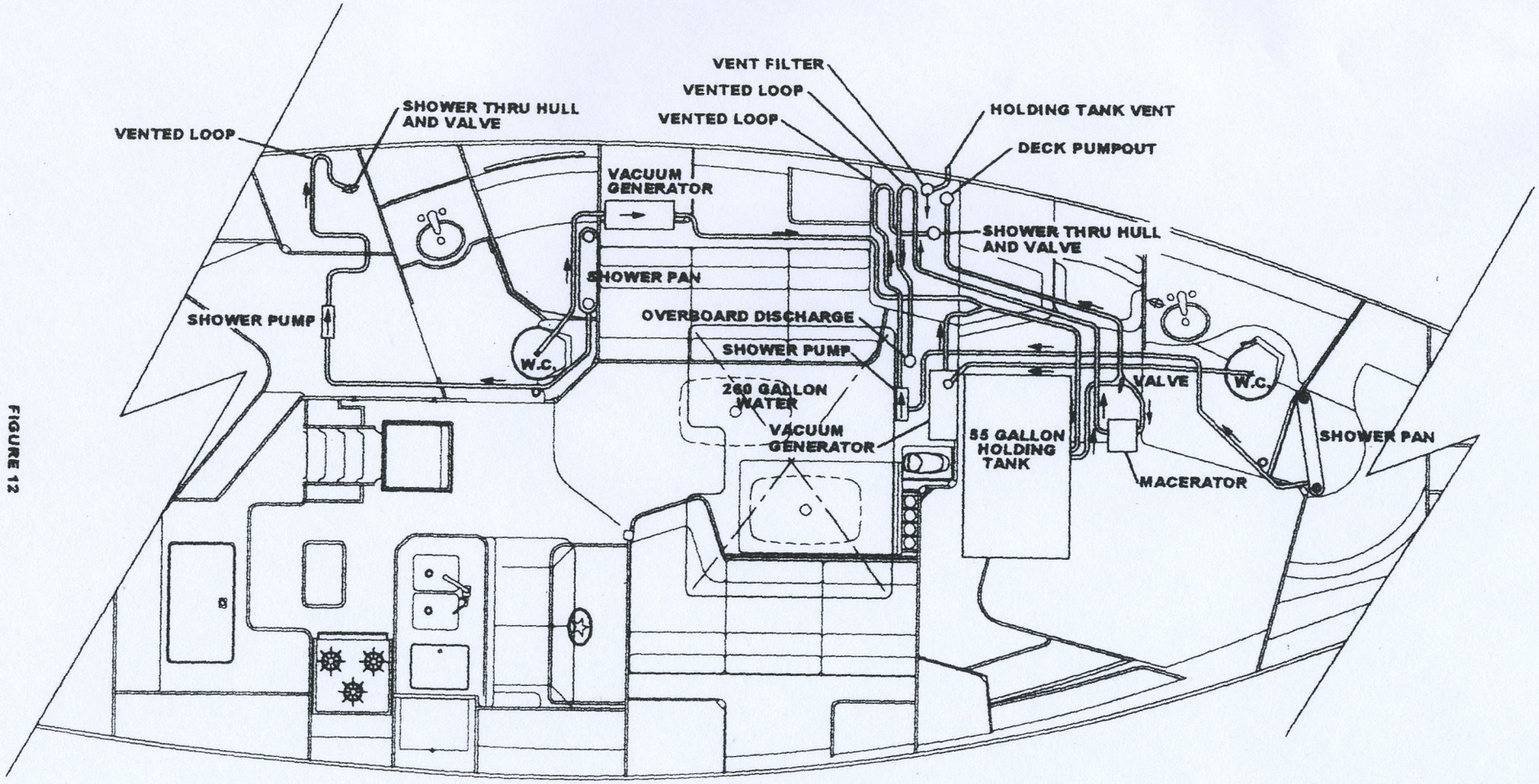

FIGURE 12

SANITATION PLUMBING
ISLAND PACKET 440

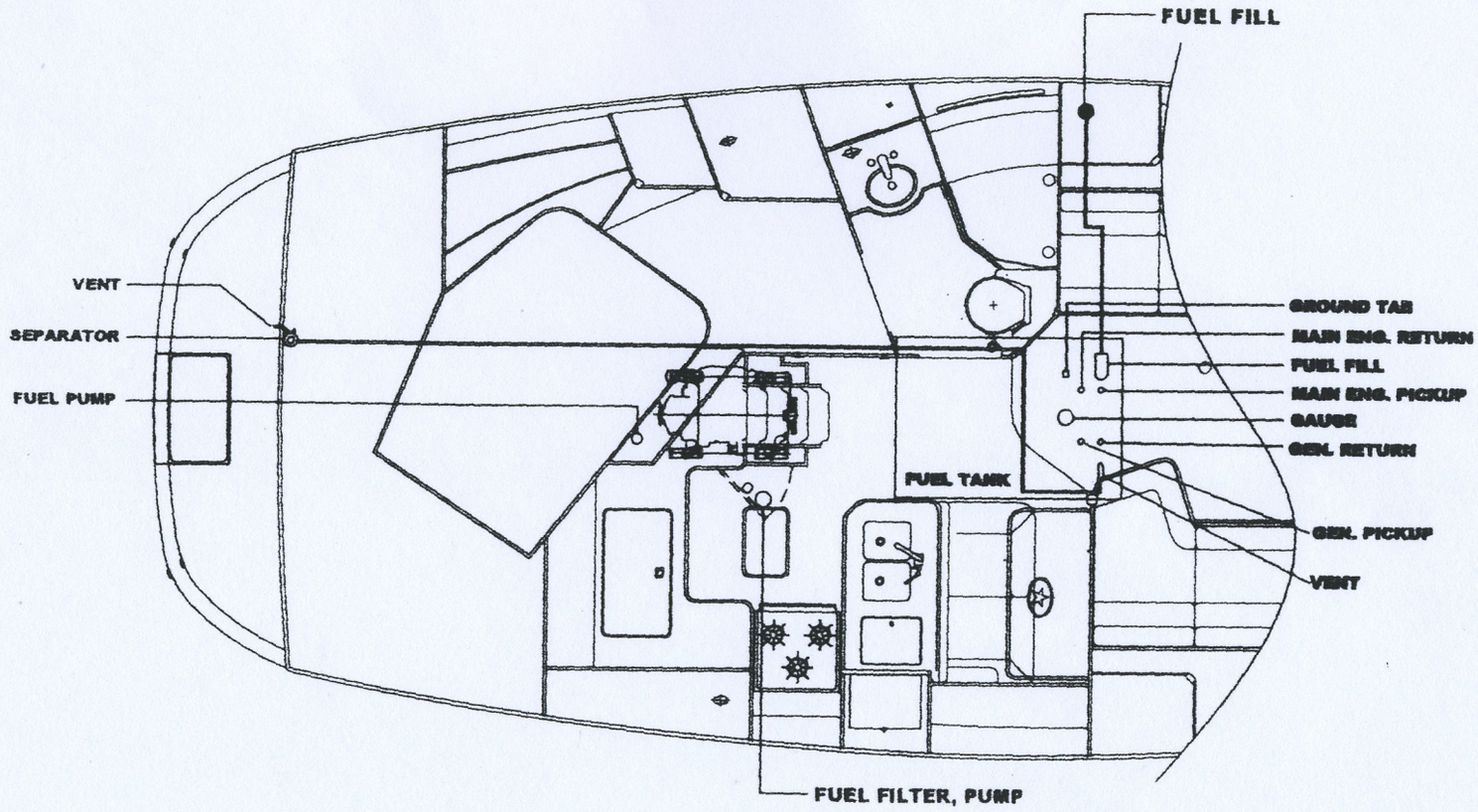

FIGURE 13

FUEL SYSTEM
ISLAND PACKET 440

ENGINE BLEEDING PROCEDURE

1. Turn ignition to "on" position.

2. Turn electric fuel pump switch (located inside galley engine room access door) "on" for a few minutes, then turn it off.

3. The above procedures are sufficient for bleeding after servicing fuel filter. If engine is run dry, continue with the following steps:

4. Push in shift disconnect and advance throttle ¼.

5. Loosen fuel injector line nuts at injectors. Using the starter, crank engine over and watch for fuel to appear at the top of the injectors. As soon as clear fuel appears, tighten nut. The engine should be kept turning through this whole operation. As you close the injector lines, the engine will start to run. After this procedure, wipe up any fuel around injectors and run engine for a brief period and check for leaks.

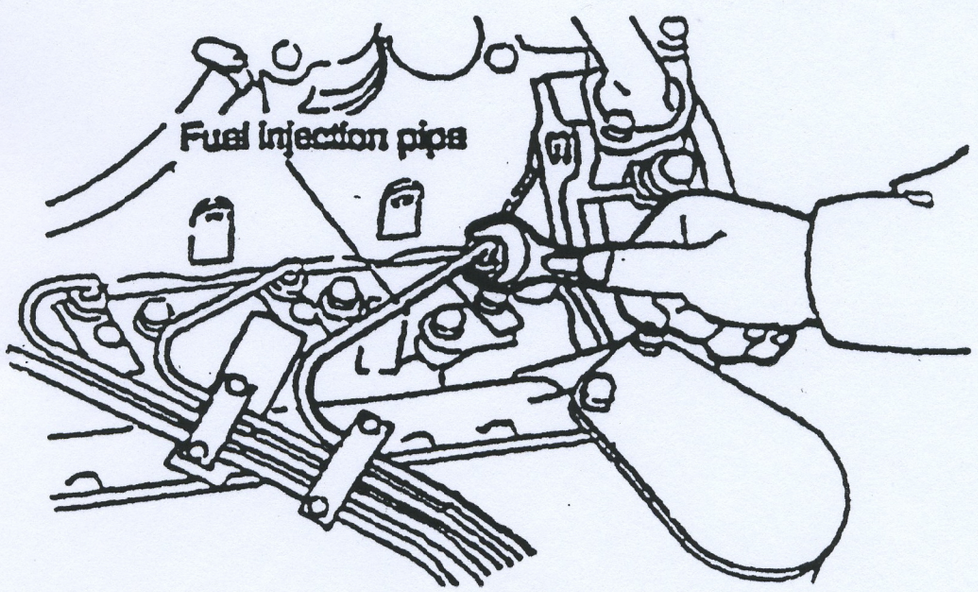

FIGURE 14

PROCEDURE TO START ENGINE WITH A DEAD ENGINE START BATTERY:

1. DEPRESS BATTERY PARALLEL SWITCH ON ENGINE PANEL TO PARALLEL ENGINE AND HOUSE BATTERIES.
2. WHILE DEPRESSING BATTERY PARALLEL SWITCH, TURN KEY AS NORMAL TO START ENGINE
3. RELEASE BATTERY PARALLEL SWITCH TO UNPARALLEL ENGINE AND HOUSE BATTERIES

EMERGENCY PROCEDURE BYPASS NEUTRAL SAFETY SWITCH:

1. Disconnect 2 red wires from 2 white wires.
2. Connect white wire to white wire.

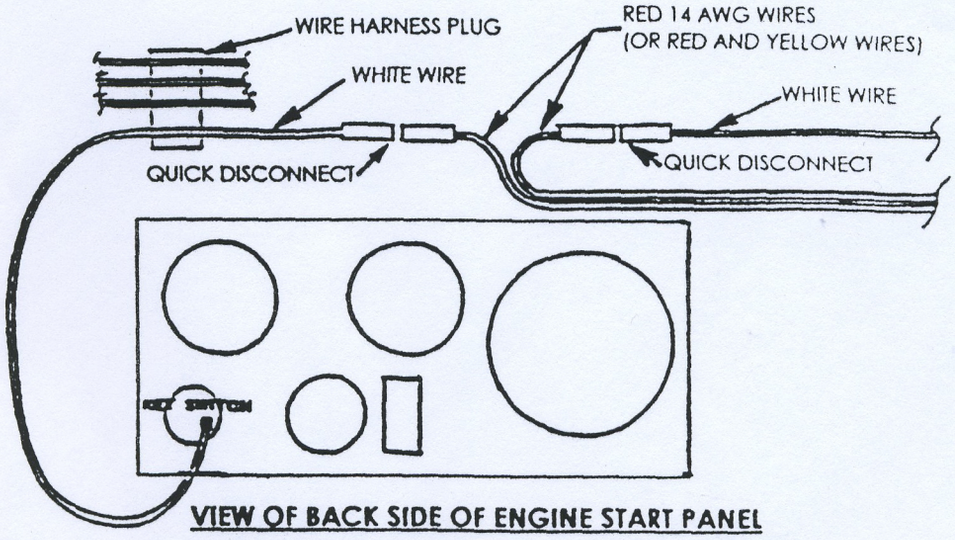

VIEW OF BACK SIDE OF ENGINE START PANEL

NOTE: NOT ALL WIRE CONNECTIONS ARE SHOWN.

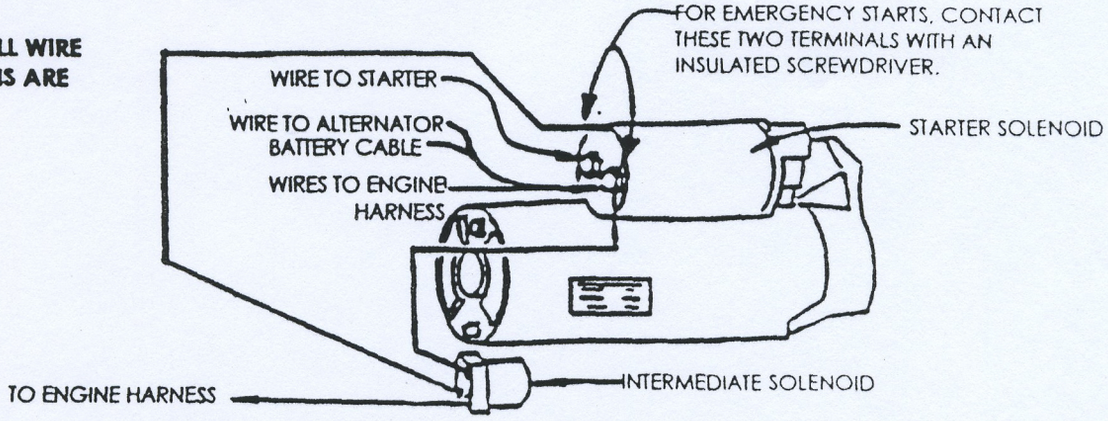

EMERGENCY STARTING ISLAND PACKET 440

FIGURE 15